इंटरनेट मानक

Disclosure to Promote the Right To Information

Whereas the Parliament of India has set out to provide a practical regime of right to information for citizens to secure access to information under the control of public authorities, in order to promote transparency and accountability in the working of every public authority, and whereas the attached publication of the Bureau of Indian Standards is of particular interest to the public, particularly disadvantaged communities and those engaged in the pursuit of education and knowledge, the attached public safety standard is made available to promote the timely dissemination of this information in an accurate manner to the public.

"जानने का अधिकार, जीने का अधिकार"
Mazdoor Kisan Shakti Sangathan
"The Right to Information, The Right to Live"

"पुराने को छोड नये के तरफ"
Jawaharlal Nehru
"Step Out From the Old to the New"

IS 8890 (1991): Thoracic Surgery Instruments - Clamps, Bronchus - Types, Shapes and Dimensions [MHD 6: Thoracic and Cardiovascular Surgery Instruments]

"ज्ञान से एक नये भारत का निर्माण"
Satyanarayan Gangaram Pitroda
"Invent a New India Using Knowledge"

Act Number 22 of 2005
The Indian Parliament
RIGHT TO INFORMATION

Made Available By
Public.Resource.Org

"ज्ञान एक ऐसा खजाना है जो कभी चुराया नहीं जा सकता है"
Bhartṛhari—Nītiśatakam
"Knowledge is such a treasure which cannot be stolen"

BLANK PAGE

BRUTUM FULMEN

IGNORANTIA JURIS NON EXCUSAT

PROTECTED BY COPYRIGHT

भारतीय मानक

वक्ष शल्यक्रिया उपकरण — कलैम्प, श्वसनी — प्ररूप, आकार एवं आयाम

(पहला पुनरीक्षण)

Indian Standard

THORACIC SURGERY INSTRUMENTS — CLAMPS, BRONCHUS — TYPES, SHAPES AND DIMENSIONS

(First Revision)

UDC 615·472·2 : 616 233-089

© BIS 1991

BUREAU OF INDIAN STANDARDS
MANAK BHAVAN, 9 BAHADUR SHAH ZAFAR MARG
NEW DELHI 110002

January 1991 **Price Group 2**

FOREWORD

This Indian Standard (First Revision) was adopted by the Bureau of Indian Standards, after the draft finalized by the Thoracic and Cardiovascular Surgery Instruments Sectional Committee had been approved by the Medical Equipment and Hospital Planning Division Council.

This standard was first issued in 1978, covering specification of Bronchus clamps used in thoracic surgery. This has been revised so as to retain the requirements in respect of shape and dimensions only, as the specification part of all such instruments is now covered in IS 3642 (Part 1) : 1990 'Specification for surgical instruments: Part 1 Non-cutting, articulated type instruments (*second revision*)'. This standard, therefore, should only be used in respect of the shape and dimensions, which are referred to in IS 3642 (Part 2) : 1990.

For the purpose of deciding whether a particular requirement of this standard is complied with, the final value, observed or calculated, expressing the result of a test or analysis, shall be rounded off in accordance with IS 2 : 1960 'Rules for rounding off numerical values (*revised*)'. The number of significant places retained in the rounded off value should be the same as that of the specified value in this standard.

Indian Standard

THORACIC SURGERY INSTRUMENTS — CLAMPS, BRONCHUS — TYPES, SHAPES AND DIMENSIONS

(First Revision)

1 SCOPE

1.1 This standard prescribes shapes and dimensions for Lee's, Price Thomas and Sorb's Pattern Bronchus clamps for use in thoracic surgery.

2 REFERENCE

2.1 Indian Standard IS 3642 (Part 1) : 1990 'Surgical instruments: Part 1 Non-cutting, articulated type instruments (*second revision*)' is a necessary adjunct to this standard.

3 SHAPES, DIMENSIONS AND PATTERNS (TYPES)

3.1 The shapes and dimensions for three patterns (types) of Bronchus clamps shall be as shown in Fig. 1, 2 and 3.

3.2 Joint — The joint shall be box type conforming to IS 3642 (Part 1) : 1990.

3.3 Serrations — The serrations shall be provided as shown in Fig. 1.

3.4 Ratchet — The ratchet teeth shall conform to IS 3642 (Part 1) : 1990 with the combinations as shown in Fig. 1, 2 and 3.

3.5 Finger Loop — The finger loop shall conform to size number 3 of IS 3642 (Part 1) : 1990.

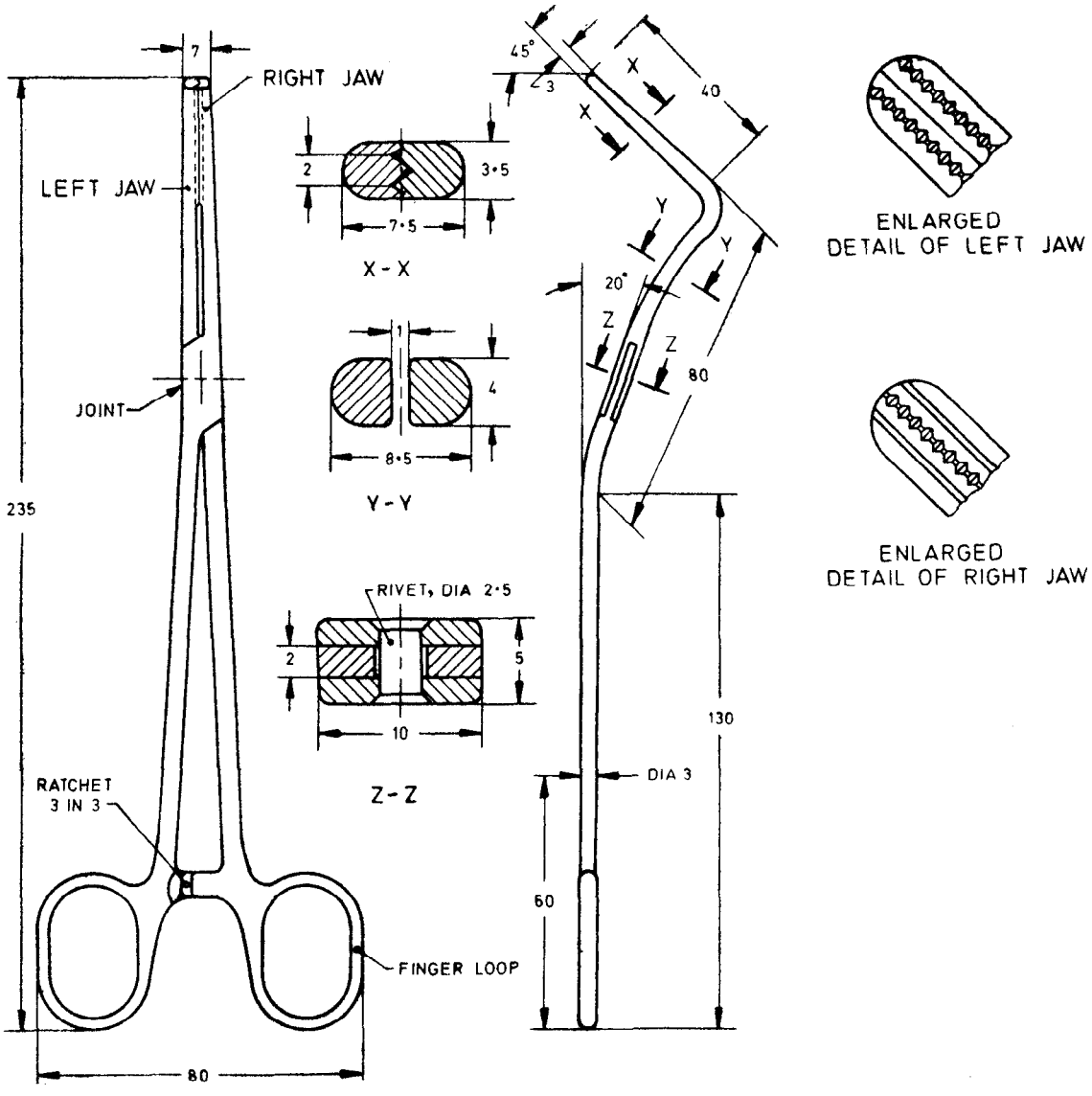

All dimensions in millimetres.

FIG. 1 CLAMP, BRONCHUS, LEE'S PATTERN

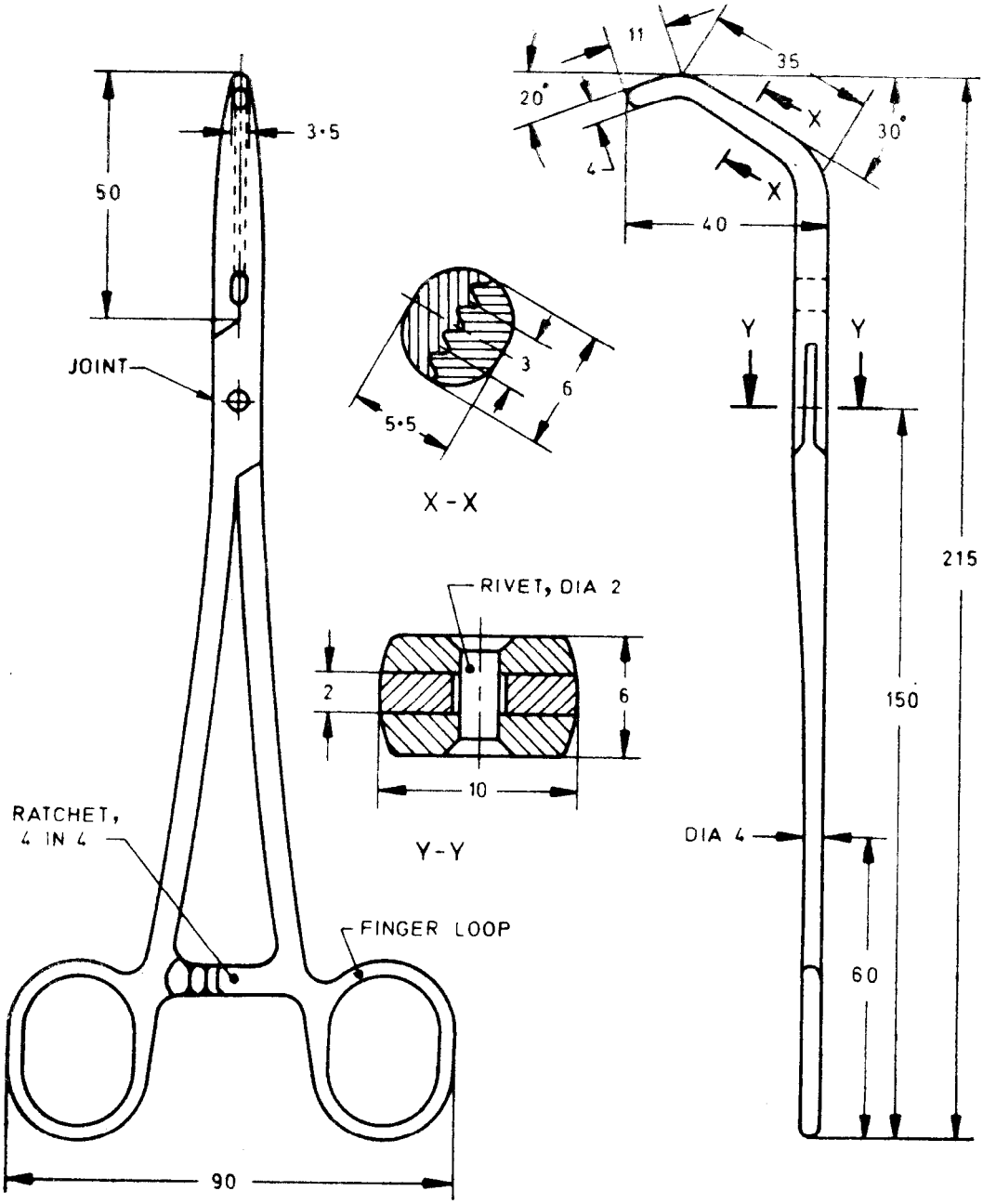

All dimensions in millimetres.

FIG. 2 CLAMP, BRONCHUS, PRICE THOMAS' PATTERN

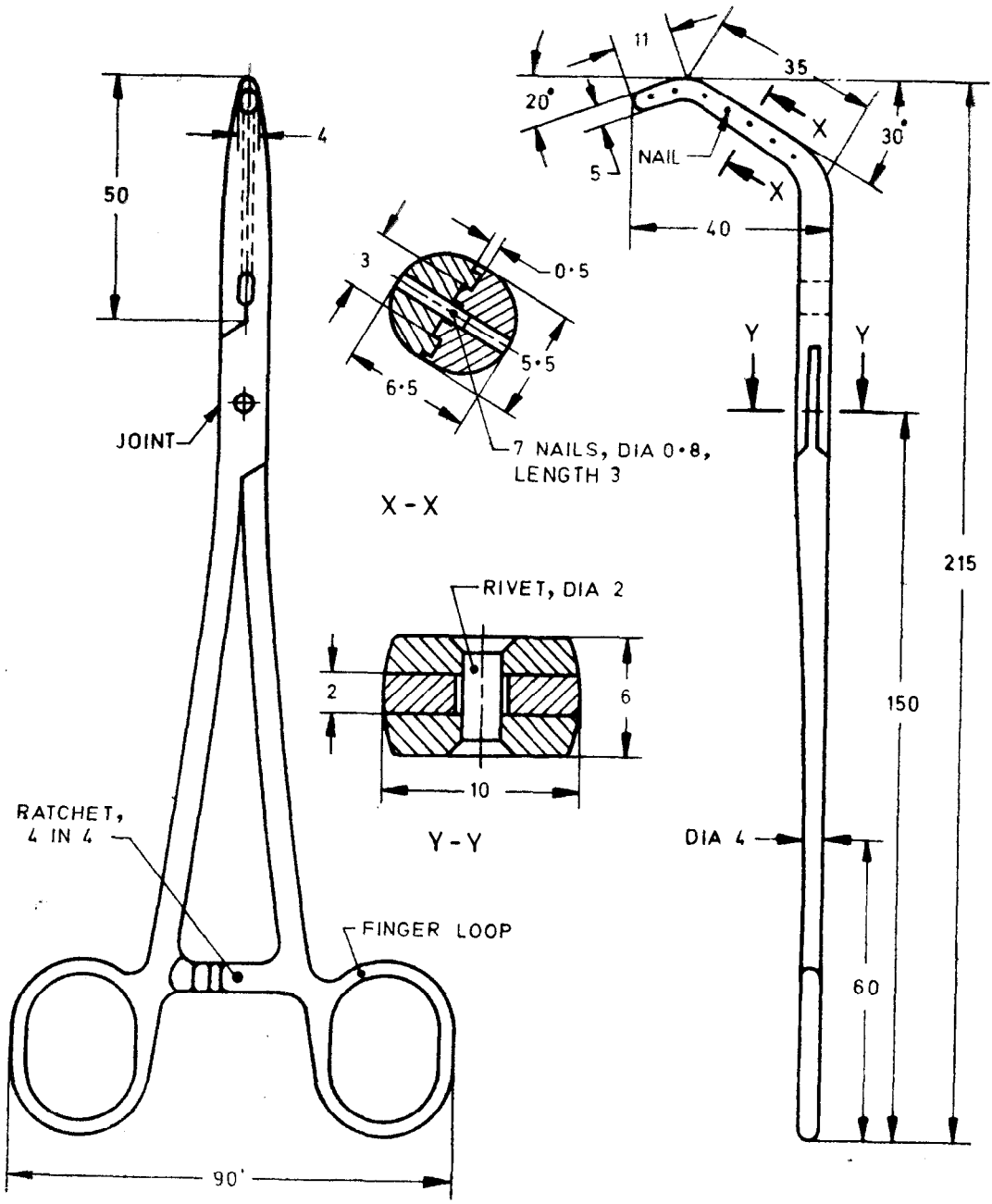

All dimensions in millimetres.

FIG. 3 CLAMP, BRONCHUS, SORB'S PATTERN

Standard Mark

The use of the Standard Mark is governed by the provisions of the *Bureau of Indian Standards Act, 1986* and the Rules and Regulations made thereunder. The Standard Mark on products covered by an Indian Standard conveys the assurance that they have been produced to comply with the requirements of that standard under a well defined system of inspection, testing and quality control which is devised and supervised by BIS and operated by the producer. Standard marked products are also continuously checked by BIS for conformity to that standard as a further safeguard. Details of conditions under which a licence for the use of the Standard Mark may be granted to manufacturers or producers may be obtained from the Bureau of Indian Standards.

Bureau of Indian Standards

BIS is a statutory institution established under the *Bureau of Indian Standards Act, 1986* to promote harmonious development of the activities of standardization, marking and quality certification of goods and attending to connected matters in the country.

Copyright

BIS has the copyright of all its publications. No part of these publications may be reproduced in any form without the prior permission in writing of BIS. This does not preclude the free use, in the course of implementing the standard, of necessary details, such as symbols and sizes, type or grade designations. Enquiries relating to copyright be addressed to the Director (Publications), BIS.

Revision of Indian Standards

Indian Standards are reviewed periodically and revised, when necessary and amendments, if any, are issued from time to time. Users of Indian Standards should ascertain that they are in possession of the latest amendments or edition. Comments on this Indian Standard may be sent to BIS giving the following reference:

Doc : No. MHD 6 (2194)

Amendments Issued Since Publication

Amend No.	Date of Issue	Text Affected

BUREAU OF INDIAN STANDARDS

Headquarters:

Manak Bhavan, 9 Bahadur Shah Zafar Marg, New Delhi 110002
Telephones : 331 01 31, 331 13 75

Telegrams : Manaksanstha
(Common to all Offices)

Regional Offices:

Central : Manak Bhavan, 9 Bahadur Shah Zafar Marg NEW DELHI 110002	331 01 31 331 13 75
Eastern : 1/14 C.I.T. Scheme VII M, V.I.P. Road, Maniktola CALCUTTA 700054	37 86 62
Northern : SCO 445-446, Sector 35-C, CHANDIGARH 160036	2 18 43
Southern : C.I.T. Campus, IV Cross Road, MADRAS 600113	41 29 16
Western : Manakalaya, E9 MIDC, Marol, Andheri (East) BOMBAY 400093	6 32 92 95

Branches : AHMADABAD. BANGALORE. BHOPAL. BHUBANESHWAR. COIMBATORE. FARIDABAD. GHAZIABAD. GUWAHATI. HYDERABAD. JAIPUR. KANPUR. PATNA. THIRUVANANTHAPURAM.

Printed at Arcee Press, New Delhi, India